US006469507B1

(12) **United States Patent**
Gerald, II et al.

(10) **Patent No.: US 6,469,507 B1**
(45) **Date of Patent: Oct. 22, 2002**

(54) **FLAT METAL CONDUCTOR PRINCIPAL DETECTOR ELEMENT FOR NMR ANALYSIS OF A SAMPLE**

(75) Inventors: **Rex E. Gerald, II**, Brookfield, IL (US); **Robert J. Klingler**, Westmont, IL (US); **Jerome W. Rathke**, Lockport, IL (US)

(73) Assignee: **The University of Chicago**, Chicago, IL (US)

(*) Notice: Subject to any disclaimer, the term of this patent is extended or adjusted under 35 U.S.C. 154(b) by 0 days.

(21) Appl. No.: **09/631,156**

(22) Filed: **Aug. 3, 2000**

(51) **Int. Cl.**[7] **G01V 3/00**

(52) **U.S. Cl.** **324/318**; 324/322; 324/307; 324/309

(58) **Field of Search** 324/318, 320, 324/322, 300, 309, 307

(56) **References Cited**

U.S. PATENT DOCUMENTS

5,574,370 A * 11/1996 Woelk et al. 324/318
6,046,592 A * 4/2000 Rathke et al. 324/300
6,191,583 B1 * 2/2001 Gerald et al. 324/318

* cited by examiner

Primary Examiner—Edward Lefkowitz
Assistant Examiner—Dixomara Vargas

(74) *Attorney, Agent, or Firm*—Joan Pennington

(57) **ABSTRACT**

Imaging apparatus are used in a toroid cavity detector for nuclear magnetic resonance (NMR) analysis to hold samples relative to a principal detector element which is a flat metal conductor, the plane of which is parallel to the longitudinal axis of the toroid cavity. A sample is held adjacent to or in contact with the principal detector element so that the sample can be subjected to NMR analysis when a static main homogeneous magnetic field (B_0) produced by a NMR magnetic device is applied to the toroid cavity and an RF excitation signal pulse is supplied from a potentiostat to the principal detector element so that an alternately energized and de-energized magnetic field (B_1) is produced in the sample and through the toroid cavity. The sample may be components of a coin cell battery which are mounted within the toroid cavity relative to the principal detector element by an non-conductive coin cell battery imager or a press assembly so that the components are hermetically sealed together and so that a direct current potential can be applied to the components. Alternately, a sample is positioned within an O-ring maintained relative to the principal detector element by a pair of glass plates that are disposed on opposite sides of the principal detector element and are compressed toward each other so that NMR analysis can be used to analyze light transmitted through the sample or to analyze a sample separated from the principal detector element by semi-permeable membranes.

5 Claims, 8 Drawing Sheets

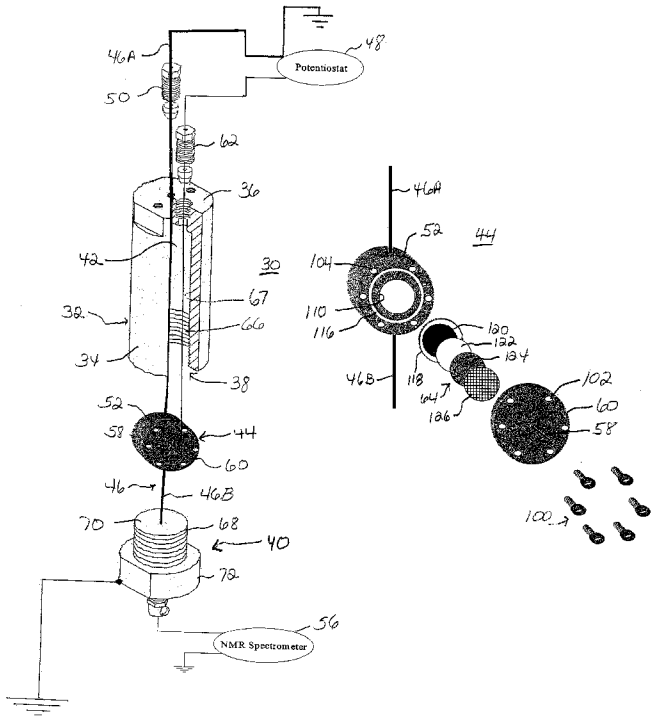

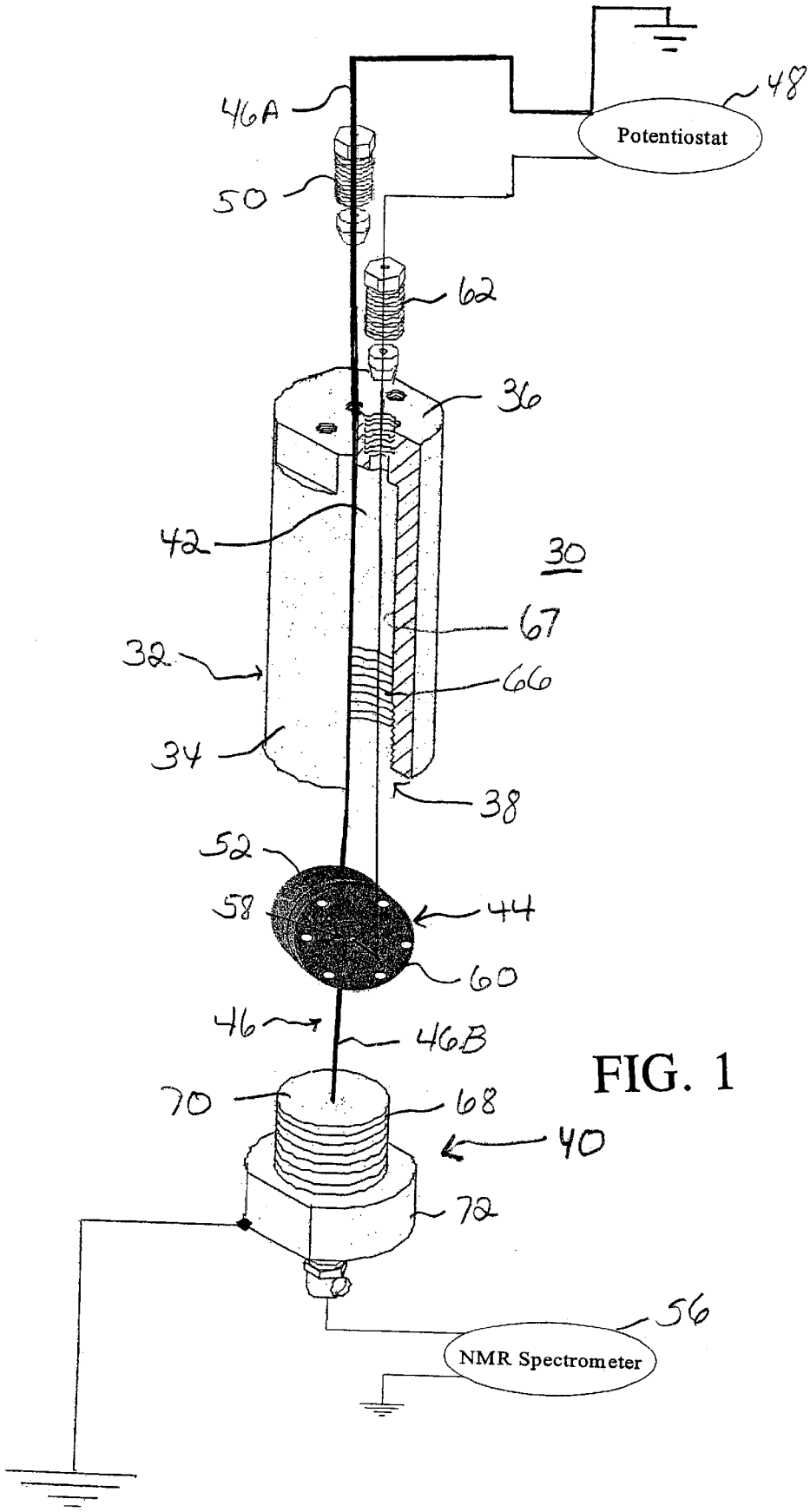
46A
48
Potentiostat
50
62
36
42
30
67
32
66
34
38
52
58
44
60
46
46B
70
68
40
72
56
NMR Spectrometer

FIG. 1

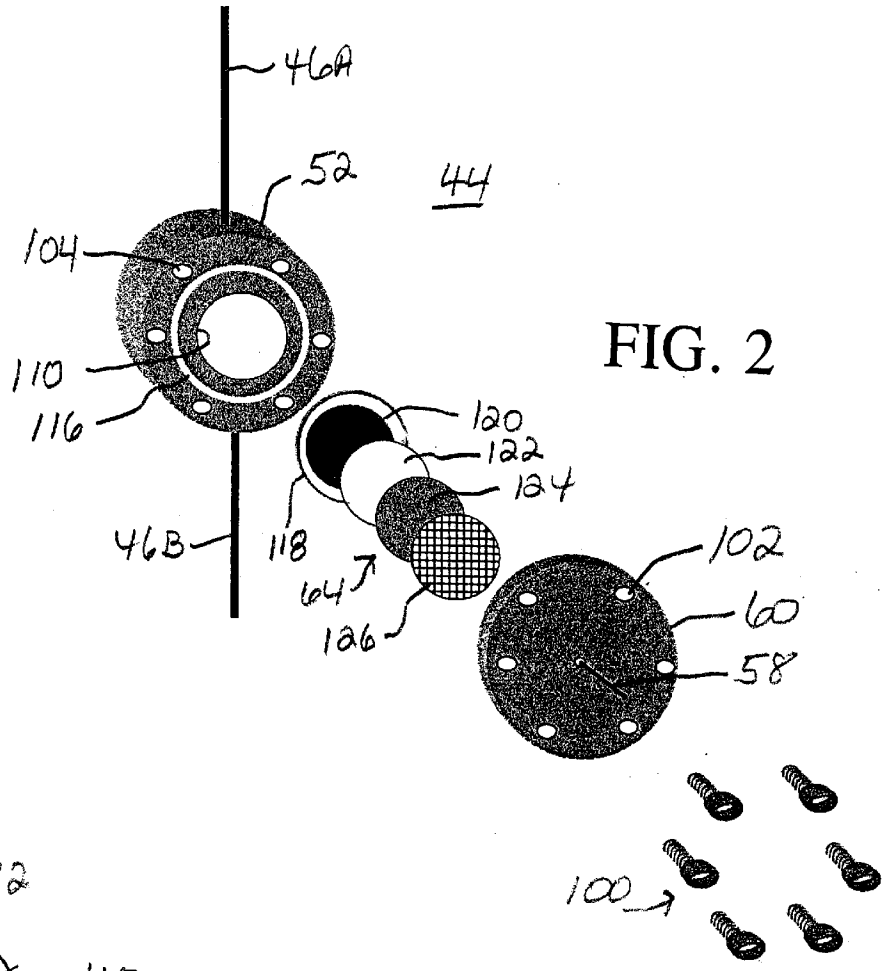

FIG. 2

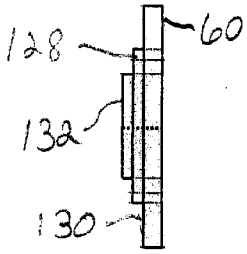

FIG. 3

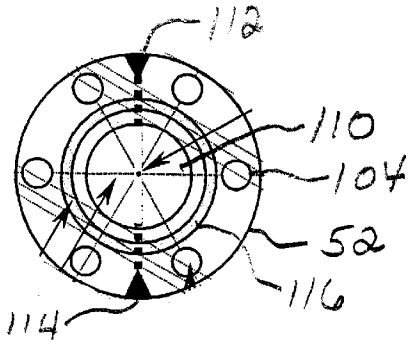

FIG. 4

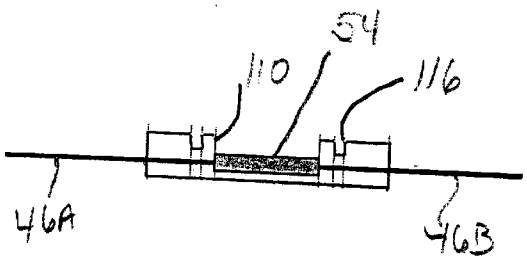

FIG. 5

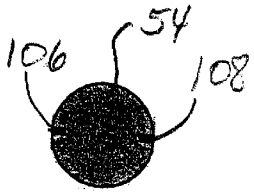

FIG. 6

FIG. 7

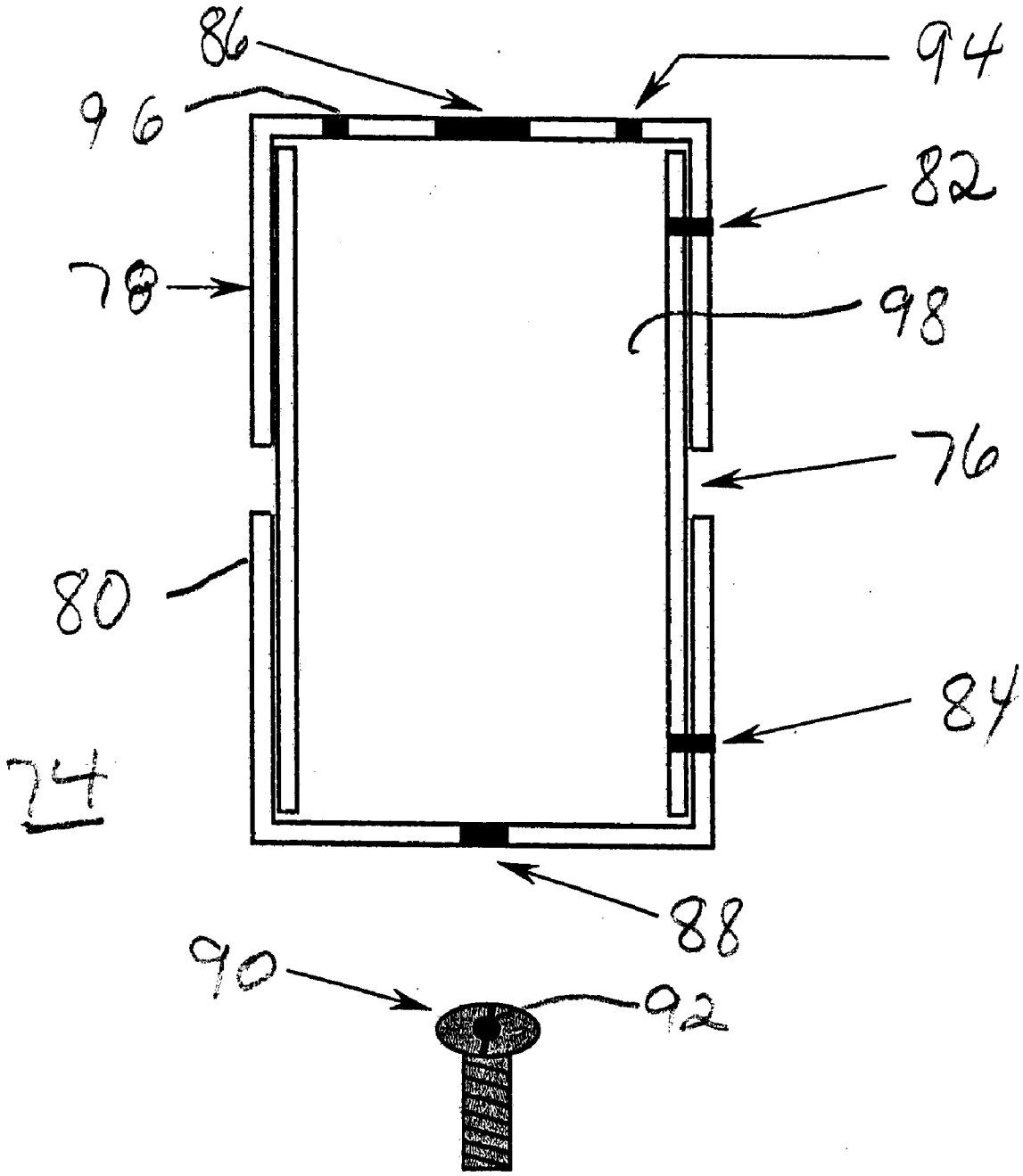

FIG. 8

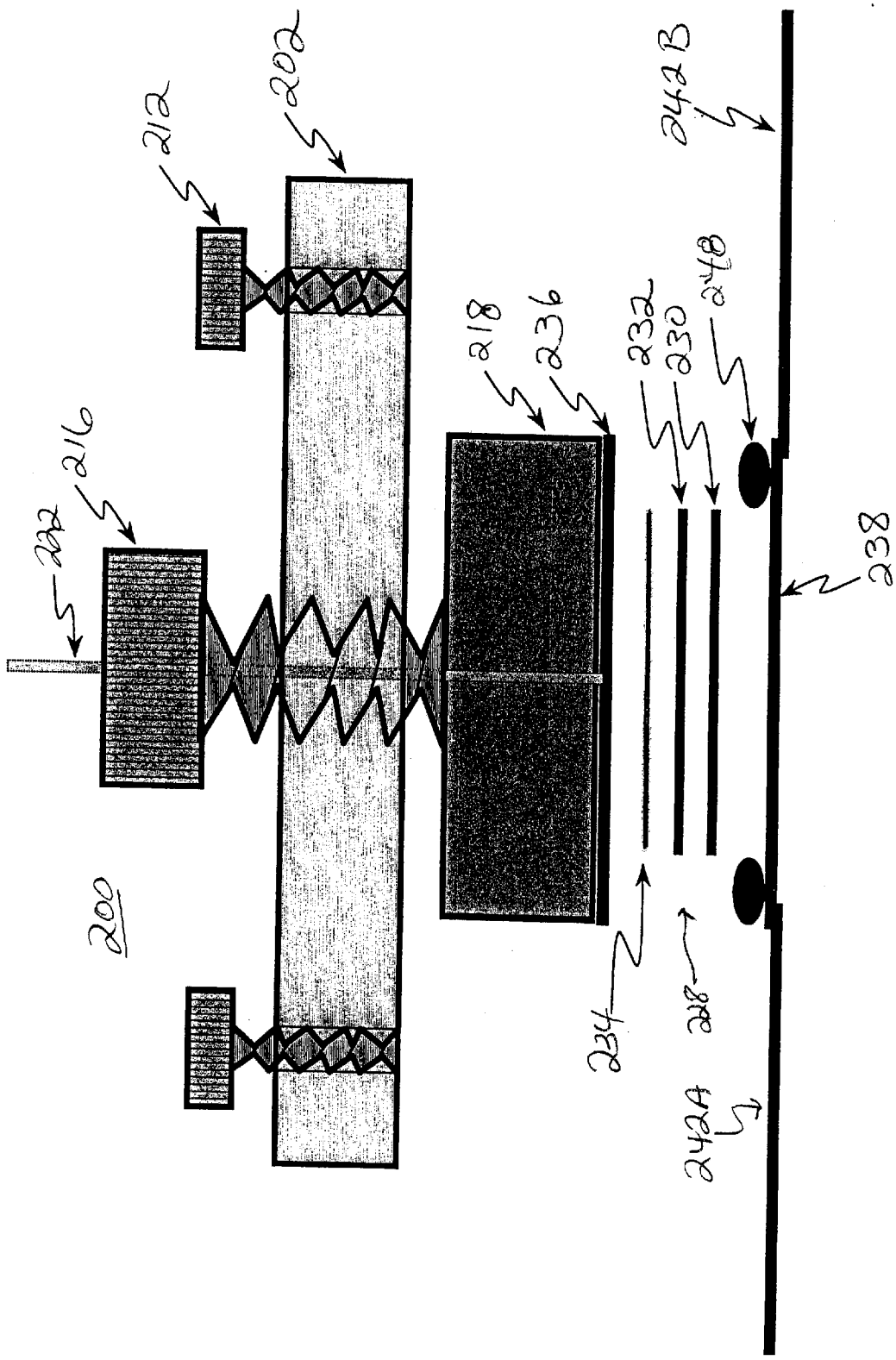

FIG. 9

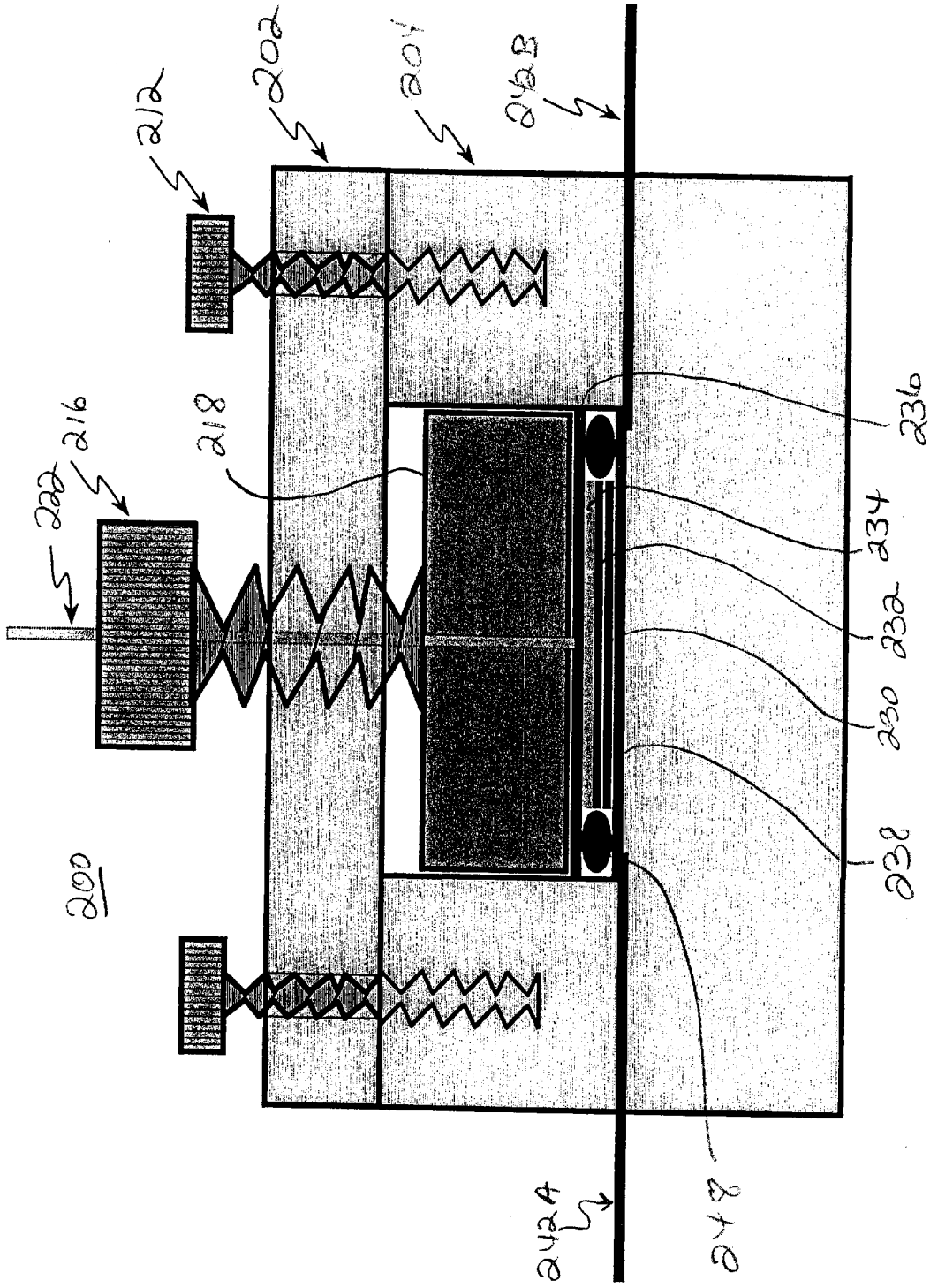

FIG. 10

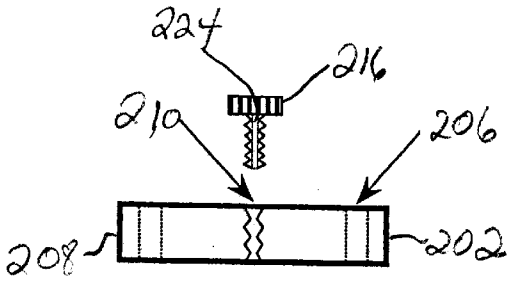

FIG. 11

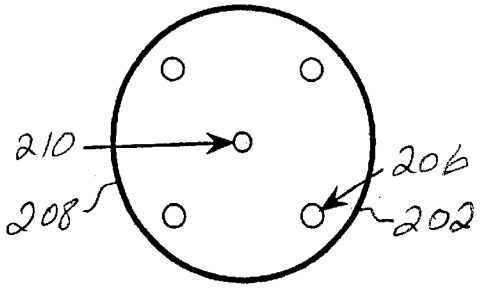

FIG. 14

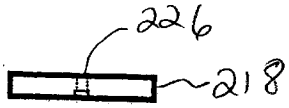

FIG. 12

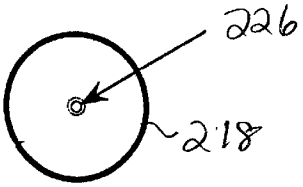

FIG. 15

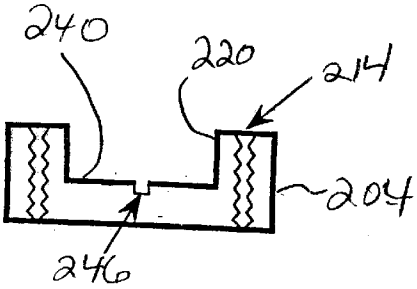

FIG. 13

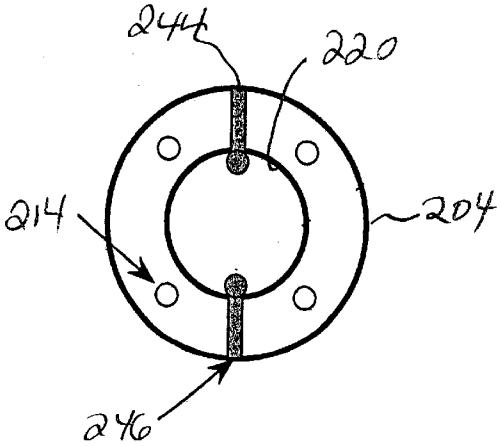

FIG. 16

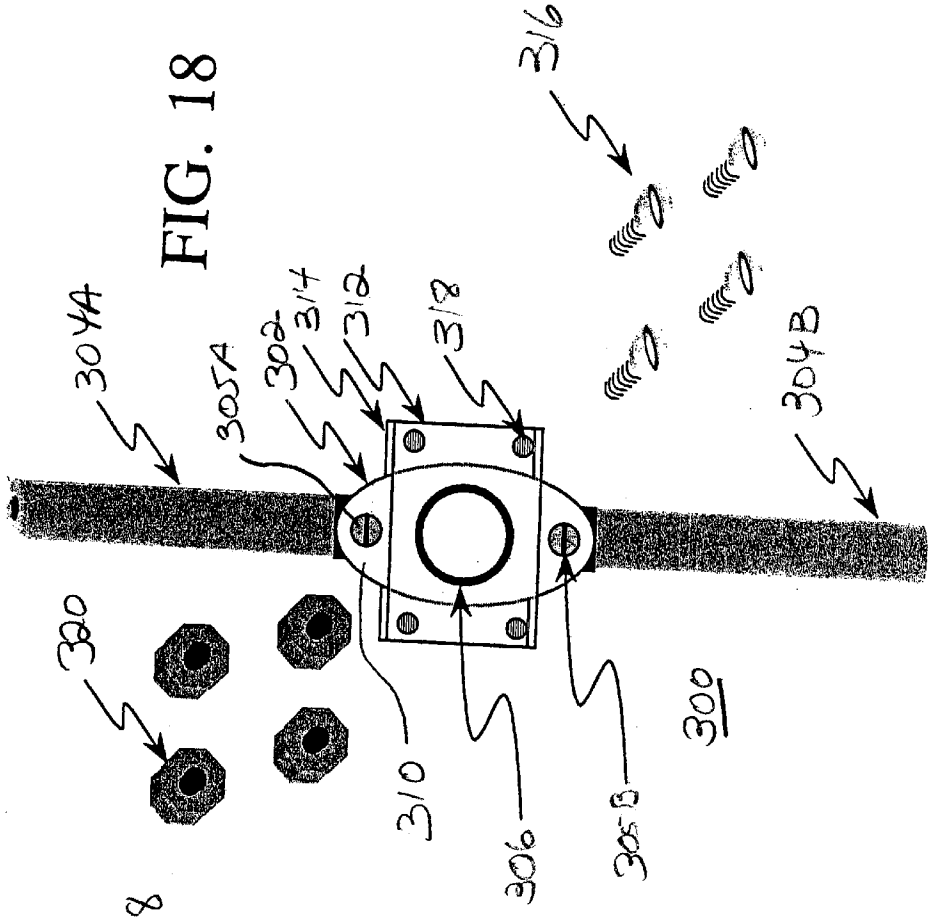
316
304A
305A
302
314
312
312
304B
320
310
306
305B
300

FIG. 18

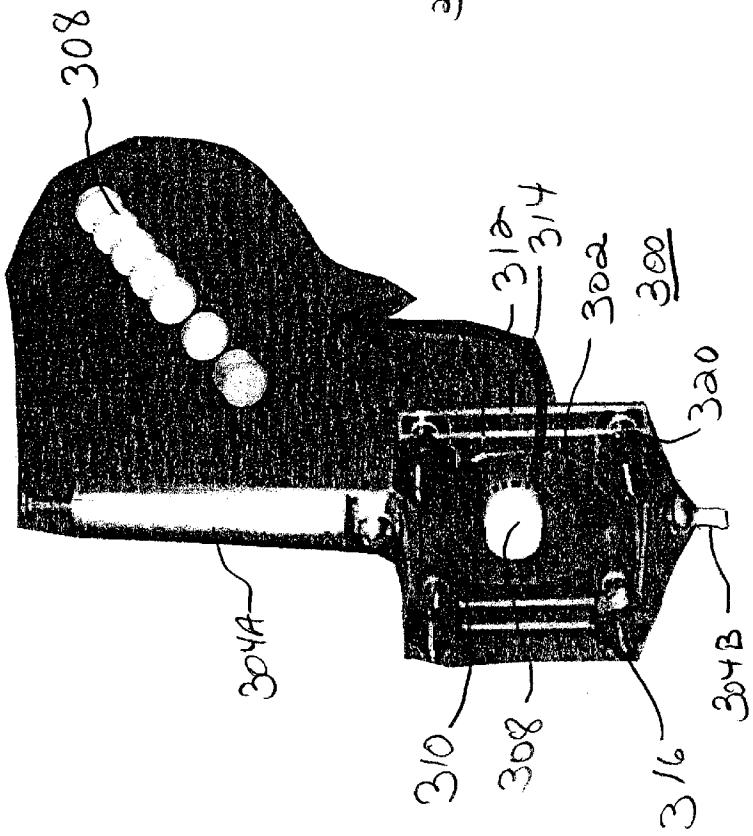
308
312
314
302
300
320
304A
310
308
316
304B

FIG. 17

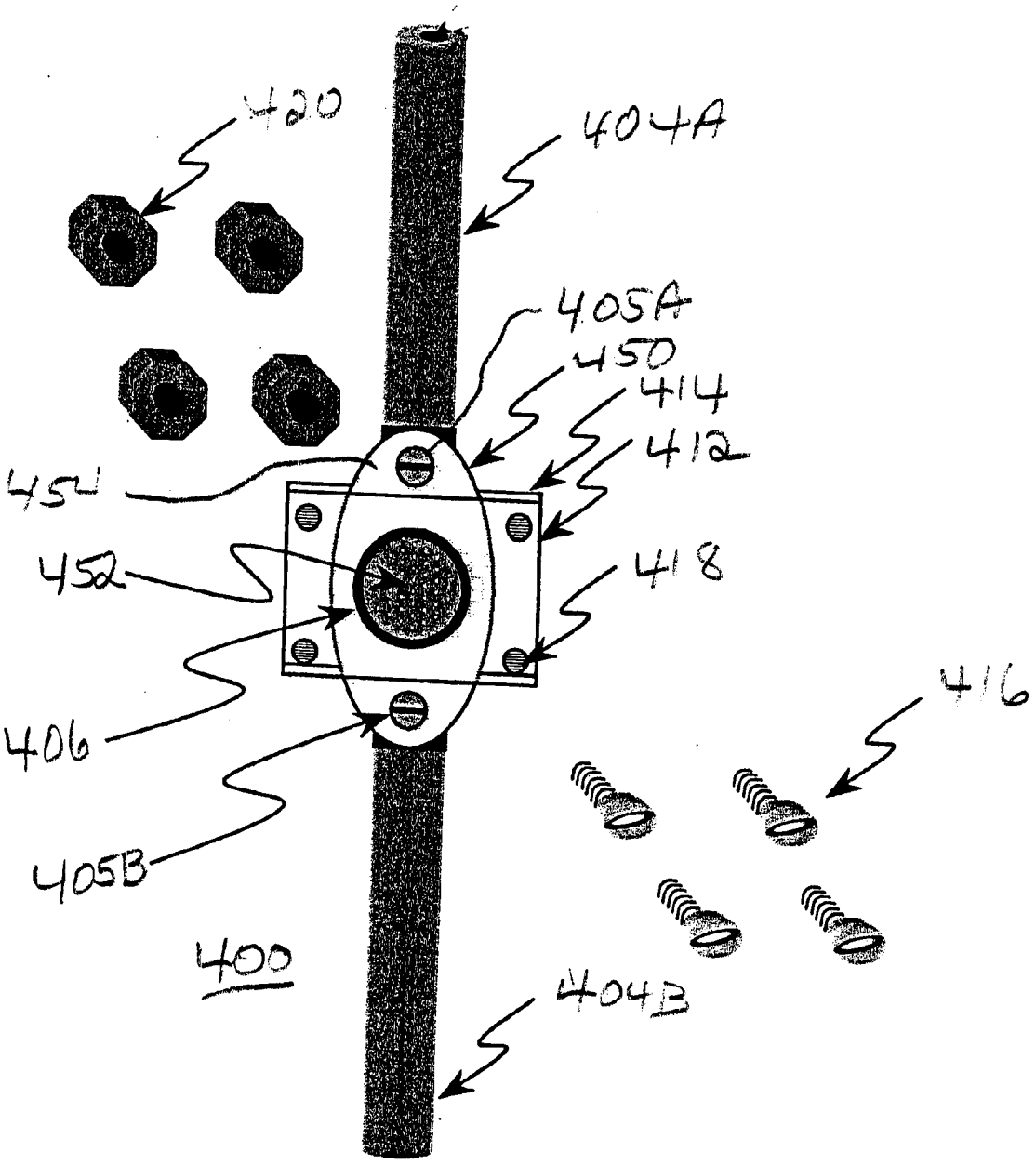

FIG. 19

FLAT METAL CONDUCTOR PRINCIPAL DETECTOR ELEMENT FOR NMR ANALYSIS OF A SAMPLE

CONTRACTUAL ORIGIN OF THE INVENTION

The United States Government has rights in this invention pursuant to Contract No. W-31-109-ENG-38 between the United States and The University of Chicago.

BACKGROUND OF THE INVENTION

1. Field of the Invention

The present invention relates to an apparatus used in nuclear magnetic resonance (NMR) imaging, and more particularly, to a new and improved imager for use in a toroid cavity detector so that in situ magnetic resonance analysis can be accomplished of samples such as battery components, membranes and thin film materials.

2. Background of the Invention

Nuclear magnetic resonance (NMR) techniques have been used as a nondestructive assay (NDA) of various materials. One NMR technique that has been used involves a toroid cavity probe. This technique enables the determination of both the presence and quantity of individual elements as well as full chemical-shift resolution (i.e., chemical speciation). For example, the toroid cavity probe has been used to determine the presence of hydrogen in materials and as to whether hydrogen is bound with oxygen (water) or another element such as a salt. At the same time, protons in other forms, such as hydrides, hydrates and acids, also are detectable and quantifiable. The ability to make such determinations and the sensitivity of toroid-based NMR imaging makes this type of technique ideal for analyzing certain types of material particularly when the materials are in disposed in various types of packaging or containers.

In one type of toroid cavity detector, a sample to be analyzed is placed in the toroid cavity and the toroid cavity is placed in an externally applied static main homogeneous magnetic field (B_0). The presence of the B_0 field causes the magnetic moments of a targeted class of nuclei in the sample to precess about the field's axis at a rate which is dependent on the magnetic field strength. Another magnetic field (B_1) is produced that is perpendicular to the B_0 field and is alternately energized and de-energized within the cavity. In the case where the B_1 field is produced by a radio frequency (RF) transmitter pulse applied to a wire or rod (working electrode) extending along the central axis of the cavity, the net sample magnetization is caused to rotate about the B_1 field axis. Following the RF pulse, the response of the sample to the applied field is detected and in most applications, received signals from the energized nuclei serve as input signals for spectroscopic analysis of the sample.

One of the unique features of the toroid cavity detector compared to some other types of detectors is the full containment of the RF magnetic field flux that is generated when the working electrode is pulsed with an RF current. As a result, the RF magnetic field flux that emanates from a sample contained within the toroid cavity and subjected to an excitation pulse of electromagnetic radiation is completely captured (i.e., detected). This feature makes the toroid cavity detector two to four times more sensitive to weak nuclear resonance signals than conventional coil resonators and allows a quantitative measurement of the total number of NMR-active nuclear spins in the sample, not possible with other types of NMR detectors.

For samples placed in a magnetic field of sufficiently high homogeneity, it is possible to record different chemical species containing a common nucleus. Not only can a proton be distinguished from a uranium nucleus, but also protons in water molecules can be distinguished from protons in hydrogen gas molecules. In fact, protons in water molecules that are in different physical environments can be distinguished. The resolving capability of chemical shift makes the toroid cavity detector a useful device for analyzing and monitoring various types of radioactive materials from spent nuclear fuel to plutonium ash.

The toroid cavity detector also differs from other, more conventional electromagnetic detectors in that it produces a gradient in the generated RF magnetic field. This B_1 field gradient has a mathematically well-defined spatial distribution. This magnetic field gradient feature has two significant consequences. First, the sensitivity of the toroid cavity is radially distributed, with the greatest sensitivity near the central axis of the device or a principal detector element located in the toroid cavity along the central axis. This enables measurements on samples of limited quantity. Second, concentric annular regions of a sample contained in the toroid cavity exchange energy with the resonator circuit at different rates. Thus, analysis of energy transfer rates in a toroid cavity can yield a radial spatial mapping of the different nuclear constituents in a cylindrical sample container. The toroid cavity also has been proven to function with asymmetric conductors.

As is disclosed in U.S. Pat. Nos. 5,574,370 and 6,046,592, the toroid cavity of a toroid cavity detector can be a cylindrically shaped, hollow housing which is closed at both opposite ends and made for example of copper. A central conductor or working electrode (for example, an inner wire or rod in a Teflon outer jacket) extends through the base of the cylinder and is positioned coincident with the major, central axis of the cylinder. In the case of the toroid cavity disclosed in the '370 patent, a fluid or gas sample to be analyzed by the toroidal cavity detector is simply introduced into the toroid cavity whereas in the case of the toroid cavity detector disclosed in the '592 patent, the fluid or gas sample to be analyzed is introduced into an electrochemical cell compartment which is disposed within the toroid cavity. This electrochemical cell compartment consists of a cylindrically shaped glass container along the central axis of which extends the working electrode of the toroid cavity detector and into which a counter electrode is disposed. The counter electrode consists of a cylindrical solenoid coil that is positioned in the electrochemical cell compartment (either at the base of the compartment or expanded along the walls of the compartment) so that it is symmetrical about the centrally located working electrode. In operation, voltages are applied across the working electrode and the counter electrode by means of an external potentiostat resulting in the chemical composition of the sample being changed adjacent to the working electrode within the electrochemical cell compartment. A NMR spectrometer records the response of the sample to the applied magnetic field generated by the toroid cavity detector when a RF frequency signal is applied to the working electrode. The use of such an electrochemical cell compartment within the toroid cavity detector allows for the measurement of macroscopic transport properties, local dynamics, and chemistry of ions as a function of distance from the electrode.

In the toroid cavity detector of the type disclosed in the '370 and '592 patents, the B_1 field is completely confined within the cavity formed in the housing of the toroid cavity detector and is generated when an RF signal is transmitted

along the central conductor. The B_1 field is strongest near the central conductor and drops off as the inverse of the distance toward the outer wall of the toroid cavity. Both sensitivity and distance resolution increase with the gradient in the B_1 field and consequently, the toroid cavity detector provides a means to image simultaneously both the chemical shift of the targeted nuclei as well as their radial distance from the center and is well suited for NMR micros-copy of films that uniformly surround the central conductor. In this regard, the amount of energy that is absorbed or transmitted by a sample within the toroid cavity detector varies with the location of the sample within the toroidal cavity such that multiple distances within the NMR active sample can be resolved by varying the transmitter pulse length. Because a homogeneous B_0 field is used, the chemical shift information is not destroyed by the imaging process as happens in conventional magnetic resonance imaging (MRI) where transient inhomogeneous B_0 fields are required. In addition, such toroid cavity detectors appear to be useful for investigations of solids and polymers where broad lines usually limit the spatial resolution to 50–100 μm. High-pressure and high-temperature capabilities of toroid cavities enable measurements of penetration rates of gaseous molecules in polymer or ceramic films in situ. In most instances, electrochemical processes can be monitored when the central conductor is used as a working electrode.

The toroid cavity detectors of the type disclosed in the '370 and the '592 patents have the advantage of providing a rugged reaction chamber that is readily machined from a variety of alloys, and the alternating magnetic field is highly confined within the cavity detector. Confining the alternating magnetic field minimizes sensitivity losses that occur through magnetic coupling with a high-pressure housing. Most importantly, the toroid cavity detector produces a well-defined magnetic field gradient, which, as noted above, varies with the inverse of the radial displacement from the center of the cavity. The resultant NMR intensity (I/I1) is predicted to depend on the transmitter pulse length, t, according to the following equation:

$$I/I_0 = 2\pi h \int_{r_1}^{r_2} \sin(-\gamma A t/r) dr$$

where γ is the gyromagnetic ratio, h is the height of the toroid, r is the radial distance from the center of the cavity, r_1 is the radius of the central conductor, r_2 is the inside radius of the cavity, and A is the proportionality constant defining the magnetic field as follows:

$$B_1 = A/r$$

The 1/r relation for the B_1 field suggests that both the NMR sensitivity and the distance resolution should increase for materials that are close to the central conductor. Thus, the toroid cavity NMR resonator or detector is particularly powerful in the characterization of surface layers applied to the central conductor.

The use of a toroid cavity detector enables complete NMR spectral information to be retained during signal processing. Additionally, the strong gradient that is intrinsic to the torus enables the toroid cavity detector to provide a theoretical spatial resolution that is better than is possible with conventional MRI. Also, spatial resolution with the toroid cavity imager is less dependent on the line widths of the NMR signals used in the measurements because chemical shift information is not used to determine the distance as it is in conventional MRI.

The toroid cavity detectors of the type disclosed in the '370 and '592 patents provide the above discussed and other significant advantages. However, the toroid cavity detectors disclosed in those patents are limited to analyzing objects that are of a cylindrical configuration or can be deposited on, can be affixed to or otherwise can surround the cylindrically shaped working electrode that extends along the elongated central axis of the toroid cavity. However, it would be advantageous to utilize a toroid cavity detector for in situ magnetic resonance analysis of samples that cannot be necessarily deposited on or affixed to a cylindrical detector element of the toroid cavity detector. One such sample is a disk electrode coin cell battery.

Coin cell batteries have become more in demand due to the increase in portable compact electronic equipment. In particular, lithium-ion rechargeable batteries have been the focus of intense research. These batteries are concentrated cells powered by the transfer of lithium ions between two electrodes that are composed of lithium-containing compounds at different concentration levels and therefore having different lithium activities. The use of carbonaceous materials as anode electrodes offers a number of advantages such as the prevention of deterioration of the electrode caused by branchlike growth of metallic lithium upon charging; the increase of the whole-cell cycle life—making longer-lasting batteries feasible; and the improvement of the reliability, minimizing the risk of explosion from volume expansion associated with using and recharging the batteries. The lower specific capacity of carbon as opposed to lithium metal is compensated for by the use of high voltage cathode materials.

A lithium-ion coin cell battery is encased in a stainless steel housing and includes a series of stacked discs. For example, the coin cell battery could include a lithium negative electrode, a microporous membrane as a separator (an insulator between opposed electrodes of the battery) and a carbon positive electrode. In many instances, the carbon is a thin film that is deposited on the inner surface of the positive electrode. In order to analyze the carbon electrode in a toroid cavity detector, attempts were made to reproduce the carbon used on the electrode and apply it as a film onto the working electrode of the toroid cavity detector. While such analyses provide some information as to the carbon electrode material, the film that was deposited on the working electrode did not necessarily duplicate the film that was actually used in the coin cell batteries and certainly the film was not being analyzed as the battery was being used (for example, at the different levels to which the battery was charged or discharged).

In view of the fact that the elements of a coin cell battery need to be oriented within a toroid cavity detector so that the planes of the elements (disks) are parallel to the axis of the working electrode of the toroid cavity detector, it is not feasible to use the toroid cavity detectors such as those disclosed in the '370 and '592 patents to obtain in situ NMR analysis of such coin cell batteries. This is in part due to the fact that the principal detector element of such toroid cavity detectors (i.e., the working electrode) is generally cylindrical in shape and the coin cell battery disk-shaped components cannot be conformed to that shape or affixed relative thereto in an appropriate orientation. Consequently, it would be advantageous to devise a modified principal detector element to be able to analyze such non-cylindrical elements within a toroid cavity detector.

Accordingly, it is an object of the present invention to provide a new and improved toroid cavity detector having a principal detector element that is shaped such that non-cylindrical samples can be analyzed.

It is another object of the present invention to provide a new and improved toroid cavity detector having a flat metal principal detector element to which components of a coin cell battery can be held in electrical contact for in situ magnetic resonance analysis.

It is still another object of the present invention to provide a new and improved toroid cavity detector having a flat metal principal detector element to which samples can be held for in situ magnetic resonance analysis and simultaneously view or probe visible light.

It is yet another object of the present invention to provide a new and improved toroid cavity detector having a sample relative to a principal detector element.

It is still a further object of the present invention to provide a new and improved toroid cavity detector having a flat metal principal detector element to which membranes and thin film materials can be held for in situ magnetic resonance analysis including where the materials can be subjected to different kinds of light to analyze absorption or fluorescence.

SUMMARY OF THE INVENTION

In accordance with these and many other objects of the present invention, a toroid cavity detector or resonator includes an outer cylindrical housing having a top and base portion that forms a cylindrical cavity. A first electrical conductor extends from a potentiostat through the top of the housing, along the central longitudinal axis of the housing to a principal detector element (for example, an alloy disk or a carbon coated metallic disk). A second electrical conductor extends from the principal detector element along the central longitudinal axis of the housing and through the base of the housing to an NMR spectrometer. The principal detector element is a flat metal conductor in a regular or irregular shape. In order to analyze a sample held adjacent to or in contact with the principal detector element within the housing, the housing is placed in an externally applied static main homogeneous magnetic field (B_0) produced by a NMR magnetic device, the magnetic field (B_0) being oriented perpendicular to the surface normal of the principal detector element. The presence of the B_0 field causes the magnetic moments of a targeted class of nuclei in the sample to precess about the field's axis at a rate which is dependent on the magnetic field strength. An RF excitation signal pulse is supplied through the first and second electrical conductors and the principal detector element from the NMR spectrometer such that an alternately energized and de-energized magnetic field (B_1) is produced in the sample and through the toroid cavity. This B_1 field is oriented perpendicular to the B_0 field and causes transitions between adjacent (allowed) or non-adjacent (unallowed) magnetic energy levels of electronic or nuclear origin. The resulting fluctuating magnetic and/or electric fields emanating from the sample induce alternating signal currents in the principal detector element which are detected during, after or interspersed with the application of the alternating excitation signal pulse. The detected signals are recorded by an analog-to-digital converter with a high sampling rate, stored in a computer and analyzed for quantitative speciation (elemental/chemical composition) of different nuclides. Quantitative speciation can be obtained for the bulk sample or as function of the position of the sample away from the surface of the principal detector element in the direction normal to the surface of the principal detector element.

One embodiment of the present invention includes a coin cell battery imager which is adapted to be mounted within the toroid cavity relative to the principal detector element. In this embodiment, the principal detector element is a circular, generally flat metal conductor that is disposed in a circular recess in a non-conductive cylindrical holder. The holder additionally includes a groove which surrounds the recess and which is adapted to either form or receive an O-ring and threaded holes extending through the holder radially outward of the groove. A non-conductive cell cover or end cap is adapted to be secured to the holder by non-conductive screws such that it functions as a piston assembly compressing circularly shaped components (disks) of a coin cell battery (including a carbon electrode, a permeable electrical separator, electroactive metal or counter electrode (lithium) and a metallic solid or mesh current collector) and a liquid electrolyte between the holder and the cap. With the cap secured to the holder, the carbon electrode is forced against the principal detector element (which serves as the direct current collector) and the coin cell battery components are hermetically sealed with the electrolyte due to a flange on the inside surface of the cap compressing the O-ring in the groove in the holder. The mesh current collector is coupled to the potentiostat by a wire that protrudes through the end cap into engagement with the mesh current collector. The battery formed by the coin cell imager is operated by a direct current (DC) potential being supplied from the potentiostat. The circuit for supplying the DC potential includes the first and second electrical conductors, the principal detector element, the coin cell battery components disposed within the coin cell imager and the wire connected between the mesh current collector and the potentiostat. As a result, the battery components can be subjected to charging and discharging by the potentiostat just as they would be when a normal coin cell battery is being operated so that in situ NMR analysis of the battery components can be accomplished with the analysis being made of the components at different dynamic conditions of the battery components as the battery is being charged or discharged.

In another embodiment of the present invention, the circular disk components of a coin cell battery are encircled by an O-ring made of chemically compatible material and the O-ring and coin cell battery components (including a carbon electrode, a permeable electrical separator, electroactive metal or counter electrode (lithium) and a metallic solid current collector) and an electrolyte are disposed between the principal detector element (in this case, a generally flat circular metal conductor) and another circular non-permeable solid electrically conductive contact member. A non-conductive piston or compression assembly is used to compress the O-ring and the battery components between the principal detector element (a circular, generally flat metal conductor) and the other contact member, also known as the counter electrode. As a result, the battery components and the electrolyte are hermetically sealed within the compressed O-ring. A contact wire is extended through the piston assembly so that the battery can be operated by a potentiostat coupled to the counter electrode and the contact wire. As a result, the battery components can be subjected to charging and discharging by the potentiostat just as they would be when a normal coin cell battery is being operated so that in situ NMR analysis of the battery components can be accomplished with the analysis being made of the components at different dynamic conditions of the battery components as it is being charged or discharged.

In still another embodiment of the present invention, the principal detector element is a generally oval-shaped, flat metal conductor that is secured to electrical conductor rods and disposed within the toroid cavity. In this embodiment, a sample (gas, liquid, or solid) is encircled by an O-ring. The

sample and O-ring are positioned between one flat side of the principal detector element and a glass plate. Another glass plate is positioned against the opposite flat side of the principal detector element. The glass plates are compressed towards each other by the tightening of nonconductive screws that extend through aligned holes in the glass plates into nonconductive nuts. As a result, the sample and O-ring are compressed against one flat side of the principal detector element and the sample is hermetically sealed between the glass plate and the principal detector element. Light (ultraviolet, visible or infrared) can be transmitted through the glass plate into the sample, back-reflected from the principal detector element, transmitted back through the sample and analyzed for absorption or fluorescence.

In yet another embodiment of the present invention, a semi-permeable membrane can be analyzed by using a principal detector element that is permeable. The principal detector element is a generally circular, square, or oval-shaped, flat metal conductor with a plurality of holes extending through it that is secured to electrically conductive rods and disposed within the toroid cavity. In this embodiment, a semi-permeable membrane is positioned against one flat side of the principal detector element. A sample (gas, liquid, or solid) encircled by an O-ring is positioned between that semi-permeable membrane and a glass plate. Another semi-permeable membrane is positioned against the opposite flat side of the principal detector element. Another sample (gas, liquid, or solid) encircled by an O-ring is positioned between that other semi-permeable membrane and another glass plate. The glass plates are compressed towards each other by the tightening of nonconductive screws that extend through aligned holes in the glass plates into nonconductive nuts. As a result, the samples and O-rings on both sides of the principal detector element are compressed against the semi-permeable membrane on the respective sides of the principal detector element. An osmotic pressure can be developed across the semi-permeable membrane so that atoms, molecules, and/or ions pass through the semi-permeable membrane and reach the principal detector element. As a result, the material that has passed through the membrane is placed directly at the most sensitive region of the toroid cavity detector, i.e., in close proximity to the principal detector element. This material can be analyzed and identified according to its spatial location by an imaging procedure or by a measured signal enhancement.

BRIEF DESCRIPTION OF THE DRAWINGS

These and many other objects and advantages of the present invention will become readily apparent from consideration of the following detailed description of the embodiments of the invention shown in the accompanying drawings wherein:

FIG. **1** is a schematic, partially cut away, partially cross-sectional, exploded perspective view of a toroid cavity detector which is shown with a coin cell battery imager disposed therein and which embodies the present invention;

FIG. **2** is an exploded perspective view of the coin cell battery imager disclosed in FIG. **1** of the drawings;

FIG. **3** is a side planar view of the cap portion of the coin cell battery imager disclosed in FIG. **2** of the drawings;

FIG. **4** is a top planar view of the holder portion of the coin cell battery imager disclosed in FIG. **2** of the drawings;

FIG. **5** is a side planar view of the holder portion of the coin cell battery imager disclosed in FIG. **2** of the drawings with two electrical conductors coupled to a principal detector element disposed therein;

FIG. **6** is a top planar view of the principal detector element disclosed in FIG. **5** of the drawings;

FIG. **7** is a side planar view of the principal detector element disclosed in FIG. **6** of the drawings;

FIG. **8** is a side planar view of an alternate embodiment of a toroid cavity housing for the toroid cavity detector of FIG. **1**;

FIG. **9** is a side schematic view of a press assembly for battery components useable in place of the coin cell battery imager in the toroid cavity detector of FIG. **1** (the press assembly shown before the battery components are compressed together);

FIG. **10** is a side schematic view of the press assembly of FIG. **9** after the battery components have been compressed together);

FIG. **11** is a side planar view of the top press component of the press assembly of FIGS. **9** and **10**;

FIG. **12** is a side planar view of the current collector used in the press assembly of FIGS. **9** and **10**;

FIG. **13** is a side planar view of the bottom press component of the press assembly of FIGS. **9** and **10**;

FIG. **14** is a top planar view of the top press component of the press assembly of FIGS. **9** and **10**;

FIG. **15** is a top planar view of the current collector used in the press assembly of FIGS. **9** and **10**;

FIG. **16** is a top planar view of the bottom press component of the press assembly of FIGS. **9** and **10**;

FIG. **17** is a perspective view of alternate holding assembly that can be used in place of the coin cell battery imager in the toroid cavity detector of FIG. **1**, the holder assembly including an alternately shaped principal detector element and glass holders for holding samples against the principal detector element;

FIG. **18** is a front, partially exploded view of the holding assembly of FIG. **17**; and

FIG. **19** is a front, partially exploded view of a holding assembly similar to the holding assembly of FIGS. **17–18** but with the principal detector element having holes therethrough so that materials held separated by a semi-permeable membrane can be analyzed.

DETAILED DESCRIPTION OF THE PREFERRED EMBODIMENTS

Referring now more specifically to FIG. **1** of the drawings, therein is disclosed a schematic representation of a toroid cavity detector that is generally designated by the reference numeral **30** and that embodies the present invention. The toroid cavity detector **30** includes a generally elongated, cylindrical shaped housing **32** with side walls **34** extending from a closed top end **36** to an open bottom end **38**. The bottom end **38** is closed by a base **40** that is grounded and that is threaded into the open bottom end **38** such that an enclosed toroid cavity **42** is formed. In the case of the toroid cavity detector **30**, a coin cell battery holder or imager **44** is disposed in the toroid cavity **42** with a electrical conductor **46** extending therethrough. An upper portion **46**A of the electrical conductor **46** extends from a potentiostat **48**, through a compression fitting **50** threaded into the top **36** of the housing **32** and into a holder portion **52** of the coin cell battery holder **44**. As will be described in more detail hereinafter (in particular in connection with FIGS. **2–7** of the drawings), a principal detector element **54** is positioned in the holder portion **52** and is connected to the upper portion **46**A of the electrical conductor **46** and to a lower portion

46B of the electrical conductor **46** that extends out from the holder portion **52** through the base **40** to a NMR spectrometer **56** that is grounded. As further illustrated in FIG. **1** of the drawings, a counter electrode wire **58** extends from an end cap **60** of the coin cell battery holder **44** through a compression fitting **62** to the potentiostat **48**.

The toroid cavity detector **30** can be used to analyze coin cell battery components which are generally designated by the reference numeral **64** in FIG. **2** and which are disposed in the coin cell battery holder **44** that is positioned in the toroid cavity **42**. In order to analyze the coin cell battery components **64**, the housing **32** is placed in an externally applied static main homogeneous magnetic field (B_0) produced by a NMR magnetic device or the like (not shown). The axis of the B_0 field is along the elongated axis of the toroid cavity **42**. The presence of the B_0 field causes the magnetic moments of a targeted class of nuclei in the battery components **64** to precess about the field's axis at a rate which is dependent on the magnetic field strength. An RF signal pulse is generated by and transmitted from the NMR spectrometer **56** along the lower electrical conductor portion **46**B, through the principal detector element **54** and along the upper electrical conductor portion **46**A to ground. This RF signal pulse causes an alternately energized and de-energized magnetic field (B_1) to be produced in the toroid cavity **42**. This B_1 field is oriented perpendicular to the B_0 field Following the RF pulse, the response of the coin cell battery components **64** to the applied field is detected and in most applications, received signals from the energized nuclei are supplied via the electrical conductor **46** to the NMR spectrometer **56** so that a spectroscopic analysis of the coin cell battery components **64** can take place.

Advantageously, this spectroscopic analysis of the coin cell battery components **64** can be accomplished while the battery components **64** are being operated as they would be in a coin cell battery. In this regard, DC potential is supplied to the coin cell battery components **64** from the potentiostat **48**, through the upper electrical conductor **46**A and through the principal detector element **54**, through the coin cell battery components **64** and through the counter electrode wire **58** to the potentiostat **48** such that a DC circuit is completed from and to the potentiostat **48** through the battery components **64**. As a result, the battery components **64** can be subjected to charging and discharging by the potentiostat **48**, just as they would be when a normal coin cell battery is being operated, when the magnetic field B_1 is being alternately energized and de-energized within the toroid cavity **42**. Consequently, the NMR analysis of the battery components **64** takes place while the battery components **64** are in situ and at different dynamic conditions of the battery components **64** as they are being charged or discharged.

As is shown in FIG. **1** of the drawings, the detector housing **32** has a generally elongated, cylindrical shape and may be machined from an elemental metal stock, an alloy or other suitable material that can provide a container that is non-magnetic, electronically conductive and withstands high pressures. For example, the housing **32** can be made of copper, stainless steel, beryllium copper or other nonmagnetic materials. The cylindrically shaped side walls **34** of the housing **32** extends from its top portion **36** to its bottom portion **38**. In the case of the housing **32**, the top portion **36** is closed, i.e., it is integrally formed with the side walls **34**, but alternatively, the top portion **36** can be a separate insert or plug inserted into an opening in the top portion **36**. On the other hand, the bottom portion **38** of the housing **32** has a generally circular opening **38** with internal threads **66** along an side wall **67** at the opening **38**. The base **40** has external threads **68** at a closure portion **70** of the base **40** enabling the closure portion **70** to be threaded into the opening **38** so as to seal the opening **38**. With the closure portion **40** threaded in the opening **38**, the toroid cavity **42** is sealed. A lower base portion **72** of the base **40** can be used to mount the housing **32** to a holder or support (not shown). By having at least the base **40** removable from the housing **32**, access is provided to the toroid cavity **42** so that the battery components **64** can be removed from or inserted into the coin cell battery holder **44**.

While the housing **32** is shown in FIG. **1** as a regular cylindrical shaped container, other regular cross section shapes (for example, a circle, oval, square or rectangle) or irregular cross section shape can be utilized. Alternately, the housing **32** can be replace by a three part housing **74** shown in FIG. **8** of the drawings. The housing **74** may be made from an elemental metal stock, an alloy or other suitable material that can provide a container that is non-magnetic, electronically conductive and withstands high pressures. For example, the housing **74** can be made of copper, stainless steel, beryllium copper or other nonmagnetic materials. The housing **74** is formed of three separable sections, i.e., a middle tube portion **76**, an upper cap **78** and a lower cap **80**. The upper cap **78** is secured to one end of the middle tube portion **76** by a fastener (not shown) that is threaded into aligned threaded screw holes **82** and the lower cap **80** is secured to the other end of the middle tube portion **76** by a fastener (not shown) that is threaded into aligned threaded screw holes **84**. The electrical conductor **46** is extended through a hole **86** in the top cap **78** and a hole **88** in the lower cap **80**. The hole **88** can be sealed by a brass screw, like the screw **90** illustrated in FIG. **8**, through which extends a bore **92**. The hole **86** can be sealed by an electrical insulator feedthrough. Additional through holes **94** and **96** are provided in the top cap **78** for additional access to a toroid cavity **98** formed by the housing **74** (for example, so that the counter electrode wire **58** can be extended into the cavity **98**). The fact that both the top cap **78** and the bottom cap **80** can be separated or removed from the middle tube portion **76** allows more ready access to the toroid cavity **98**.

As previously indicated, the upper portion **46**A of the electrical conductor **46** extends from the potentiostat **48** through the compression fitting **50** in the top **36** of the housing **32** to the principal detector element **54** and then out through the base **40** to the NMR spectrometer **56**. In the case of the toroid cavity detector **30** disclosed in FIG. **1**, the electrical conductor **46** and the principal detector element **54** are disposed along the central, elongated axis of the housing **34**. Alternately, the electrical conductor **46** and the principal detector element **54** can be displaced laterally from that axis. The electrical conductor **46** may include an the outer insulating jacket with an inner wire disposed therein. The jacket can be made of any suitable insulating material (for example, TEFLON). Alternately, the electrical conductor **46** can be a hollow rod that is made of copper or the like. The counter electrode wire **58** may be a wire having an outer jacket or the like. When the NMR spectrometer **56** supplies an RF current along the electrical conductor **46**, the housing **34** provides a return path for the current flowing along the electrical conductor **46** and the B_1 field is energized within the toroid cavity **42**. This field B_1 is generally perpendicular to the B_0 field that is within the toroid cavity detector **30**. By pulsing of a RF current, the B_1 field within the toroid cavity **42** is alternately energized and de-energized. The response of any sample within the toroid cavity **42** to the applied B_1 field is detected and in most applications, received signals

from the energized nuclei serve as input signals for spectroscopic analysis of the sample.

The principal detector element **54** is a part of the path for the RF signals and in the case of the toroid cavity detector **30** of FIG. **1** is disposed within the coin cell battery holder **44** so that the battery components **64** can be analyzed. With particular reference to FIGS. **2–7**, the coin cell battery holder **44** can be dimensioned to mimic the configuration of a standard 2032-size coin cell although it can be also dimensioned to mimic any other sized coin cell. The coin cell battery holder **44** includes the holder **52** in which the principal detector element **54** is disposed and the end cap **60**. The end cap **60** is secured to the holder **52** by non-conductive screws **100** that extend through holes **102** in the end cap **60** and threaded into threaded holes **104** in the holder **44**. When the end cap **60** is so secured to the holder **52**, the battery components **64** are hermetically sealed within the coin cell battery holder **44**.

As is shown in FIGS. **5–7**, the principal detector element **54** is a generally circular, flat metal conductor made of copper or the like and the plane of the principal detector element **54** is parallel to the longitudinal axis of the toroid cavity housing **32**. The upper portion **46**A of the electrical conductor **46** is secured to the principal detector element **54** at a threaded hole **106** and similarly the lower portion **46**B of the electrical conductor **46** is secured to the principal detector element **54** at a threaded hole **108**. The principal detector element **54** is disposed in a circular recess **110** in the cylindrically shaped holder **52**. The holder **52** and the end cap **60** are formed of a nonconductive material such as TEFLON. The holder **52** has through holes **112** and **114** so that the electrical conductor portions **46**A and **46**B can be extended for attachment to the principal detector element **54**. The holder **52** additionally includes a circular groove **116** which surrounds the recess **110** and which is adapted to receive an O-ring **118**. The O-ring **118** is compressed in the groove **116** when the cap **60** is secured to the holder **52** so that the battery components **64** that are disposed in the coin cell battery holder **44** are hermetically sealed within the coin cell battery holder **44**.

The coin cell battery components **64** that are disposed in the coin cell battery holder **44** are circularly shaped components or disks and include a carbon electrode **120**, a permeable electrical separator **122**, an electroactive metal or counter electrode **124** and a metallic solid or mesh current collector **126**. In addition, an electrolyte (not illustrated in FIG. **2**) can be included with the battery components **64** when they are hermetically sealed in the coin cell battery holder **44**.

The carbon electrode **120** is positioned against the principal detector element **54** such that the principal detector element **54** also functions as the current collector for the carbon electrode material **120**. This positioning of the carbon electrode **120** against the principal detector element **54** is advantageous because that is where the optimum NMR signal sensitivity is located. This is important due to the fact that there is considerable interest in the carbon electrode **120** and its performance capabilities. In this regard, carbonaceous materials have received considerable interest for use as anodes in lithium-ion batteries. When such carbon containing anodes are used, the batteries are noted for potential safety and reliability because the carbon anodes are less prone to form dendrites than metallic lithium anodes. Most investigations have utilized carbon materials that are available from existing sources such as natural graphite, cokes, carbon fibers, non-graphitizable carbon, and pyrolitic carbon. While these investigations have provided some information, the toroid cavity detector **30** that utilizes the coin cell battery holder **44** allows the analysis of carbon electrodes, such as the disk **120**, fabricated by the battery manufacturer in the identical manner as they are made for use in the coin cell batteries.

The permeable electrical separator **122** is disposed between the carbon electrode **120** and the electroactive metal or counter electrode **124**. The separator can be made of Celgard and functions to electrically isolate the counter electrode **124** from the carbon electrode **120** so that they do not short together when a DC current is flowing from the potentiostat **48** through the upper portion **46**A of the electrical conductor **46** and the counter electrode wire **58**. The electroactive metal disk **124** can be a lithium disk formed from a sheet of lithium foil. In order to couple the lithium disk **124** to the counter electrode wire **58**, a copper mesh current collector **126** is disposed between the end cap **60** and the lithium disk **124**. The counter electrode wire **58** extends through the end cap **60** so as to be in contact with the current collector **126**.

In order to seal the battery components **64** within the coin cell battery holder **44**, the O-ring **118** is inserted into the groove **116** and the screws **100** are extended through the screw holes **102** and threaded into the threaded holes **104** in the holder **44**. As the screws **100** are being so threaded, the O-ring **118** is compressed between the groove **116** and a flange **128** extending from an inside surface **130** of the end cap **60**. In addition, a projection **132** extending inwardly from the end cap **60** presses against the mesh current collector **126** such that the counter electrode **124**, the separator **122** and the carbon electrode **120** are compressed together within the O-ring **118**. As a result, the battery components **64** are hermetically sealed by the O-ring **118** so that an electrolyte can be included with the battery components **64**. The compression of the battery components **64** in this manner results in the carbon electrode **120** being forced against the principal detector element **54** lodged in the recess **110** of the holder **52**. As indicated above, the carbon electrode **120** is accordingly at a location where the most optimum NMR signal sensitivity is located.

With the battery components **64** so sealed in the holder **44**, a DC potential can be applied to the components **64** from the potentiostat **48** through the upper electrical conductor **46**A, the principal detector element **54** and the counter electrode wire **58** to the potentiostat **48** such that a DC circuit is completed from the potentiostat **48** through the battery components **64**. As a result, the battery components **64** can be subjected to charging and discharging by the potentiostat **48** just as they would be during normal operation of the coin cell battery when the magnetic field B_1 is being alternately energized and de energized within the toroid cavity **42**. Consequently, the NMR analysis of the battery components **64** takes place while the battery components **64** are in situ and at different dynamic conditions of the battery components **64** as they are being charged or discharged.

As discussed above with respect to the coin cell battery holder **44**, that holder **44** permits in situ NMR analysis of the components **64** of a coin cell battery in a toroid cavity detector **30**. Another mechanism for holding the components of a coin cell battery for such in situ NMR analysis of battery components is disclosed in FIGS. **9–16** of the drawings. More specifically, a non-conductive and non-magnetic press or compression assembly **200** is disclosed in FIGS. **9–10** and embodies the present invention. The press assembly **200** is adapted to be mounted in a toroid cavity housing like the housing **32** disclosed in FIG. **1** of the drawings in place of the coin cell battery holder **44** and includes a top press

portion **202** and a bottom press portion **204**. The top press portion **202** has a generally cylindrical shape (see FIGS. **11** and **14**) as does the bottom press portion (see FIGS. **13** and **16**). The top press portion has a series of through holes **206** near its outer circumferential surface **208** and a threaded hole **210** at its central axis. Knurled top nylon screws **212** extend through the through holes **206** and are threaded into corresponding threaded holes **214** in the bottom press portion **204** in order to secure the top press portion **202** to the bottom press portion **204**. Another knurled top nylon screw **216** is threaded into the threaded hole **210** in the top press portion **202** and applies a force against a piston **218** when turned clockwise (tightened).

As is illustrated in FIGS. **9–10**, the screw **216** engages a non-conductive piston **218** that is located in a circular recess **220** in the bottom press portion **204**. A counter electrode wire **222** extends through a central bore **224** in the screw **216** and through a bore **226** in the piston **218** so that it can apply a pressure to coin cell battery components or disks **228** (the components **228** include a carbon electrode **230**, a permeable electrical separator **232**, an electroactive metal or counter electrode (lithium) **234** and a metallic solid current collector **236**) that are disposed in the recess **220** between the piston **218** and a principal detector element **238**.

The principal detector element **238** is positioned on a bottom surface **240** of the bottom press portion **204**, is generally the same configuration as the principal detector element **54** (i.e., it is a generally circular, flat metal conductor made of copper or the like with its plane generally parallel to the longitudinal axis of the toroid cavity housing **32** in which the principal element detector **238** is disposed), and is coupled to an electrical conductor portion **242**A that extends through a hole **244** in the bottom press portion **204** and to another electrical conductor portion **242**B that extends through a hole **246** in the bottom press portion **204** (the electrical conductor portions **242**A and **242**B respectively correspond to the electrical conductor portions **46**A and **46**B that extend into and through the toroid cavity housing **32** depicted in FIG. **1**). In addition to the coin cell battery components **228** disposed in the recess **220**, an O-ring **248** of a slightly larger inside diameter than the diameter of the coin cell battery disks **228** is disposed in the recess **220**. Once the coin cell battery components **228** and the O-ring **248** are disposed in the recess **220** (as for example shown in FIG. **9** of the drawings), the knurled screw **216** is threaded into the hole **210** such that the piston **218** is forced toward the bottom surface **240** of the recess **220**. As is shown in FIG. **10**, the movement of the piston **218** toward the bottom surface **240** results in the coin cell battery components **228** being compressed together and the O-ring **248** being compressed between the principal detector element **238** and the current collector **236** such that the coin cell battery components **228** are hermetically sealed between the piston **218** and the principal detector element **238** by the compressed O-ring **248**. In view of the fact that the coin cell battery components **228** are so hermetically sealed, an electrolyte can be included with the battery components **228**. Advantageously, the counter electrode wire **222** does not extend through the current collector **236** (see FIG. **10**) into the area sealed by the O-ring **248** so that this configuration does present any sealing problems. On the other hand in the case of the coin cell battery holder **44**, the counter electrode wire **58** does extend through the end cap **60** into the sealed area so it is necessary to ensure that the counter electrode wire **58** is properly sealed in the end cap **60**. The O-ring seals the battery components **228** directly to the principal detector element **238** so that the connections of the electrical conductor portions **242**A and **242**B are outside of the sealed area. This is not the case in the coin cell battery holder **44** so the electrical conductor portions **46**A and **46**B need to be properly sealed as they extend into the holder **52**.

The compression of the battery components **228** in this manner results in the carbon electrode **230** being forced against the principal detector element **238** lodged in the recess **220** of the bottom press portion **204**. As indicated above, the carbon electrode **230** is accordingly at a location where the most optimum NMR signal sensitivity is located when the battery components **228** are being analyzed. In this regard, a DC potential can be applied to the components **228** from a potentiostat like the potentiostat **48** illustrated in FIG. **1** of the drawings through the upper electrical conductor **242**A, the principal detector element **238** and the counter electrode wire **222**. As a result, the battery components **228** can be subjected to charging and discharging by the potentiostat **48** just as they would be during normal operation of the coin cell battery when the magnetic field B_1 is being alternately energized and de-energized within the toroid cavity **42**. Consequently, the NMR analysis of the battery components **228** takes place while the battery components **228** are in situ and at different dynamic conditions of the battery components **228** as they are being charged or discharged.

In the case of the coin cell battery holder **44** and the press assembly **200**, the components of coin cell batteries were being analyzed by the use of NMR analysis. As a result, the coin cell battery holder **44** and the press assembly **200** were specifically designed and sized for the battery components **64** and **228** respectively. However, it would be advantageous to conduct NMR analysis of other gas, liquid or solid samples in the toroid cavity detector **30** disclosed in FIG. **1** of the drawing particularly in connection with how those samples absorb or fluoresce light (ultraviolet, visible or infrared). In FIGS. **17–18** of the drawings, a sample holder **300** is disclosed that also embodies the present invention. The sample holder **300** is adapted to be mounted in a toroid cavity housing like the housing **32** disclosed in FIG. **1** of the drawings in place of the coin cell battery holder **44** (in such a case, a counter electrode wire like the counter electrode wire **58** would not be necessary because the sample holder **300** would not be used with battery components that are to be charged or discharged).

A principal detector element **302** is used in connection with the sample holder **300**. Unlike the principal detector elements **54** and **238**, the principal detector element **302** is a generally oval-shaped, flat metal conductor (the principal detector **302** can be other shapes such as circular or square), but like the principal detector elements **54** and **238** has its plane generally parallel to the longitudinal axis of the toroid cavity housing **32** in which the principal element detector **302** is disposed. An electrical conductor portion **304**A is secured to one of the ends of the principal detector element **302** by a fastener **305**A and an electrical conductor portion **304**B is secured to the other end of the principal detector element **302** by a fastener **305**B. A sample (gas, liquid, or solid) to be analyzed in the toroid cavity detector **32** is encircled by an O-ring **306**. For example, the sample in FIG. **17** is layers of adhesive tape **308**. The sample **308** and the O-ring **306** are positioned between one flat side **310** of the principal detector element **302** and a transparent or glass plate **312**. Another transparent or glass plate **314** is positioned against a flat side of the principal detector element **302** opposite to the flat side **310**. The plates **312** and **314** are compressed towards each other by the tightening of non-conductive screws **316** that extend through aligned holes

318 in the plates 312 and 314 into nonconductive nuts 320. As a result, the sample 308 and the O-ring 306 are compressed against the flat side 310 of the principal detector element 302 and the sample 308 is hermetically sealed between the plate 312 and the principal detector element 302. In view of the fact that the sample is maintained under the plate 312, light (ultraviolet, visible or infrared) can be transmitted through the plate 312 into the sample 308, back-reflected from the principal detector element 302, and transmitted back through the sample 308 so that the light can be viewed or analyzed for absorption or fluorescence.

By using a sample holder similar to sample holder 300, a semi-permeable membrane can be subjected to NMR analysis. Such a sample holder 400 is illustrated in FIG. 19 of the drawings and also embodies the present invention. The sample holder 400 is adapted to be mounted in a toroid cavity housing like the housing 32 disclosed in FIG. 1 of the drawings in place of the coin cell battery holder 44. As indicated, the sample holder 400 is similar to the sample holder 300 disclosed in FIGS. 17–18 of the drawings. Accordingly, the components of the sample holder 400 that are specifically referred to herein are referenced by the same reference numerals as the corresponding components in the sample holder 300 except that the quantity 100 has been added to the reference numerals. An electrical conductor portion 404A is secured to one of the ends of a principal detector element 450 by a fastener 405A and an electrical conductor portion 404B is secured to the other end of the principal detector element 402 by a fastener 405B.

The sample holder 400 includes the principal detector element 450 that is a generally oval-shaped, flat metal conductor (the principal detector 450 can be other shapes such as circular or square), but like the principal detector element 302 has its plane generally parallel to the longitudinal axis of the toroid cavity housing 32 in which the principal detector element 450 is disposed. Unlike the principal detector element 302, the principal detector element 450 has a plurality of holes 460 extending through it. A semi-permeable membrane 452 is positioned against one flat side 454 of the principal detector element 450. A sample (gas, liquid, or solid) encircled by an O-ring 406 is positioned between that semi-permeable membrane 452 and a transparent or glass plate 412. Another semi-permeable membrane is positioned against the opposite flat side of the principal detector element 450. Another sample (gas, liquid, or solid) encircled by an O-ring (not shown) is positioned between that other semi-permeable membrane and another transparent or glass plate 414. The plates 412 and 414 are compressed towards each other by the tightening of nonconductive screws 416 that extend through aligned holes 418 in the plates 412 and 414 into nonconductive nuts 420. As a result, the samples and O-rings on both sides of the principal detector element 450 are compressed against the semi-permeable membranes (such as the semi-permeable membrane 452) on the respective sides of the principal detector element 450. An osmotic pressure can be developed across the semi-permeable membrane 452 so that atoms, molecules, and/or ions pass through the semi-permeable membrane 452 and reach the principal detector element 450. As a result, the material that has passed through the membrane 452 is placed directly at the most sensitive region of the toroid cavity detector, i.e., in close proximity to the principal detector element 450. This material can be analyzed and identified according to its spatial location by an imaging procedure or by a measured signal enhancement.

Obviously, many modifications and variations of the present invention are possible in light of the above teachings. Thus, it is to be understood that, within the scope of the appended claims, the invention may be practiced otherwise than as specifically described above.

What is claimed and desired to be secured by Letters Patent of the United States is:

1. A toroid cavity detector for in-situ analysis of a sample through the use of nuclear magnetic resonance, said toroid cavity detector comprising:

a housing having a top and base portion forming a toroid cavity with a longitudinal axis, said housing being placed in an externally applied magnetic field B_0;

a first electrical conductor extending through said top of said housing along said longitudinal axis into said toroid cavity;

a principal detector element contained within said toroid cavity connected to said first electrical conductor;

a second electrical conductor connected to said principal detector element and extending along said central longitudinal axis of said housing through said base of said housing;

said principal detector element comprising a generally flat metal conductor having a plane that is oriented generally parallel to said longitudinal axis of said toroid cavity, said metal conductor being disposed adjacent to said sample and having a predefined shape for said sample; and

an NMR spectrometer applying an RF excitation signal pulse through said first and second electrical conductors and said principal detector element for producing an alternately energized and de-energized magnetic field B_1 in said sample and through the toroid cavity.

2. A toroid cavity detector as set forth in claim 1 wherein said principal detector element comprising said generally flat metal conductor is circular in shape.

3. A toroid cavity detector as set forth in claim 1 wherein said principal detector element comprising said generally flat metal conductor is oval in shape.

4. A toroid cavity detector as set forth in claim 1 wherein said principal detector element comprising said generally flat metal conductor has a plurality of holes extending therethrough.

5. A toroid cavity detector as set forth in claim 1 wherein said sample is held in contact with said principal detector element comprising said generally flat metal conductor.

* * * * *